

PVGreenCard

Powered by SAPVIA

South African Photovoltaic Industry Association

PV GreenCard
Training Centre Guidelines

SAPVIA PV GreenCard

Guidelines for setting up a PV GreenCard Training Centre

June 2023

IN PARTNERSHIP WITH

Contents

Background 1
Management 1
Skills Development 2
The Solar PV Service Technician National Curriculum 2
5-Day PV GreenCard Installer Training Course 2
2-Day PV GreenCard Assessment 2
How to issue the SAPVIA PV GreenCard As-Built report 3
Step 1 – Training 3
Step 2 – Assessment 3
Step 3 – Registration 3
Step 4 – Benefits of Being a PVGC installation Company. 4
Step 5 – Issuing 5
Requirements to set up a PV GreenCard Training Centre 6
Application 6
1. Human Resources 6
2. Learning/Training Materials 6
3. Facilities (minimum requirements) 7
Setting up the Training Centre 7
Equipment List and Setup Instructions 7
Material for PV Courses 7
Theory 7
Practical 7
Inverter installation 10
DC Wiring (DC Combiner) Specifications 12
AC Wiring Specifications 12
Additional Requirements 13
Optional Requirements 13
Mounting 14
Safety measures 14
Accreditation by SAPVIA 14
Summary of the Procedure 14
PV GreenCard Training Syllabus 15
1. Overview 15
2. Using the Syllabus 16
3. Course Duration 16
4. Activities 16
5. Hints/Suggestions 17
6. Meaningful Display Models 17
7. PowerPoint Presentations 18
Annexure A: Sample GreenCard I
Annexure B: Training Course Overview II
Annexure C: Application Form IV
Annexure D: Terms and Conditions V

List of Acronyms

AC	Alternating Current
AMEU	Association of Municipal Electricity Utilities
DC	Direct Current
DGS Berlin	Deutsche Gesellschaft für Sonnenergie e.V. Landesverband Berlin Brandenburg
EIR	Electrical Installation Regulations
GIZ	Deutsche Gesellschaft für Internationale Zusammenarbeit (GIZ) GmbH
NRS	National Rationalised Specifications
OHSA	Occupational Helath and Safety Act
PV	Photovoltaic
QCTO	Quality Council for Trades and Occupations
SALGA	South African Local Government Assocaition
SABS	South African Bureau of Standards
SANS	South African National Standards
SAPVIA	South African Photovoltaic Industry Association
SAQA	South African Qualifications Authority
SARETEC	South African Renewable Energy Technology Centre
SSEG	Small Scale Embedded Generation

Background

The South African Photovoltaic Industry Association (SAPVIA) is a non-for-profit industry association that aims to promote, develop, and grow the Photovoltaic ("PV") sector as part of the wider renewable energy industry in South Africa. SAPVIA is the representative voice of the solar PV industry in South Africa. SAPVIA's vision for solar PV to be a significant and reliable contributor to the South African electricity mix to advance energy security. This is to be achieved through policy and market alignment, and ultimately contribute to environmental sustainability as well as economic development agenda for the country.

Skilled labour and quality assurance mechanisms are key issues for the sustainable development of the solar PV Industry. To this end, SAPVIA alongside GIZ, SARETEC and GreenCape developed the "PV GreenCard Assessment" for PV installers in 2017. This assessment was developed based on the South African national qualification for Solar PV Installers. This is aimed at vetting installers' competencies to operate in the sector to protect the integrity of the solar PV industry. This assessment was designed to be a voluntary undertaking by the industry which is endorsed by SAPVIA.

Additionally, a 5-Day PV GreenCard Installer Training Course was developed to present the minimum knowledge requirements for Solar PV installers and prepare candidates to undertake the PV GreenCard Assessment. A list of Training Institutions and Assessment Centres can be found on the PV GreenCard website: https://www.pvgreencard.co.za/training-institutions/.

Management

The PV GreenCard program is owned, administered, and managed by the SAPVIA Secretariat. The secretariat performs compliance monitoring and evaluation of existing training and assessment centres and performs an oversight and quality assurance role on behalf of the SAPVIA Management Committee. The SAPVIA Secretariat and Management Committee have the sole discretionary responsibility to:

- accredit new training centres,
- Ensure a standard of quality across all PV GreenCard Training Centres

SAPVIA will set up a PV Training Committee (PVTC) for oversight of the PV Training Centres made up of one of the original partners, GreenCape, a representative from the SAPVIA secretariat and Management Committee. The main task of the committee will be to;

- Ensure a standard of quality across all PV GreenCard Training and Assessment Centres
- Provide a periodic objective review of the PV GreenCard training procedures and training content.

Each year after the first year of appointment, the PV Training Centre must complete and submit a qualitative report, which serves the purpose of a self-evaluation and providing the SAPVIA Secretariat and management committee with the basis for continued monitoring, evaluation, and review. Every 2 years the Training Centre will be subject to an inspection and evaluation by a solar PV subject matter expert and accredited Trainer appointed by the SAPVIA Secretariat.

Skills Development

The Solar PV Service Technician National Curriculum

The ***Solar Photovoltaic Service Technician, Curriculum Code 313109001, NQF Level 5*** was developed in 2010 and registered with the South African Qualification Authority (SAQA) under Qualification ID 99447 in December 2016. The National Qualification was based on the need for a national training offering to support the growing renewable energy industry. Although specifically focusing on utility-scale installations, the qualification consists of 4 modular part qualifications (Solar PV Mounter, Solar PV Installer, Solar PV Technician, and Solar PV Service Technician) which ensures inclusivity of career prospects for a wide range of candidates from matric/school leaver.

5-Day PV GreenCard Installer Training Course

Based on the "Solar PV Installer" part qualification, SAPVIA alongside SARETEC and GreenCape with support from GIZ and DGS Berlin, and in partnership with merSETA (the appointed development and quality partner to QCTO) have developed a 1-week reference training course tailored to the solar PV installers.

Having a registered national qualification means that the public, as well as private training providers, can align their PV training offering to the nationally accepted and accredited qualification. SAPVIA supported by the GIZ and DGS Berlin then developed reference training material (presentations and supporting documents) for a 5-day PV GreenCard Installer Training Course following the exit outcomes of the curriculum specific to the Solar PV Installer Part Qualification. The course was developed to present the minimum knowledge requirements for solar PV installers and prepare candidates to undertake the PV GreenCard Assessment.

2-Day PV GreenCard Assessment

The 2-day assessment includes a theoretical as well as a practical assessment where candidates are required to mount PV installations on a simulated roof environment. The purpose of this assessment is to primarily ascertain the competency of installers and vet their abilities to gain access to the PV GreenCard quality mechanism.

How to issue the SAPVIA PV GreenCard As-Built report

The PV GreenCard is a national, standardised hand-over report for embedded solar PV installations (Often also called an “as-built report”). Practically, the PV GreenCard is a checklist that installers fill out after completion of an installation to hand over to their clients. The PV GreenCard As-Built report includes detailed information on the type of panels and inverters used, the equipment specification and serial information, the capacity of the system, and commissioning tests.

This detailed documentation helps investors and clients to trust the installer and gives proof that everything was installed according to SAPVIA’s PV GreenCard quality guidelines. Furthermore, structured documentation is very useful when spare parts or repairs are required after a couple of years of operation of the system.

Only SAPVIA PV GreenCard certified installers are allowed to issue a PV GreenCard. SAPVIA’s aim is that every small-to medium-scale Solar PV installation gets a PV GreenCard.

For Installers, issuing the SAPVIA PV GreenCard is a 5-step process:

Step 1 – Training

Training is vital preparation for the PV GreenCard Assessment. SAPVIA endorses training providers to offer training as preparation or a remedial action for the assessment. The training is structured to cover the basics of solar PV installation (practical work) and basic design. Training provides the vital background to pass the PV GreenCard Assessment and acts as a refresher course for those who do not successfully complete the assessment.

Step 2 – Assessment

The PV GreenCard programme is founded on quality and installers must pass the PV GreenCard Assessment to demonstrate competence and gain access to become part of the PV GreenCard programme. This allows these successful candidates to issue a PV GreenCard As-Built Reports. The PV GreenCard Assessment is structured to recognise the participant’s theoretical and practical knowledge. Participants need to enrol for the assessment at one of the endorsed assessment centres and take the theoretical and practical exam.

A list of Assessment Centres may be found on the PV GreenCard Website at https://www.pvgreencard.co.za/assessment-centres/.

Step 3 – Registration

Installation companies duly registered in terms of the laws of the Republic of South Africa, and which comply with the minimum criteria will be eligible to register.

Installers can register their company at https://www.pvgreencard.co.za/reg/auth/inst-reg.php and pay subscription fee. Only employees of the company that passed the PV GreenCard Assessment can register as official PV GreenCard issuer of the company.

The minimum criteria for installer companies are:

- An individual who has passed the PV GreenCard Assessment is in the company's full-time employment.
- The company is registered with the Department of Employment and Labour as an electrical contractor.

All installer companies must comply with the SAPVIA Installation Guidelines, relevant SANS Standards, and all other relevant regulations, including Municipals SSEG requirements, when installing Solar PV systems.

Installation companies are required to register annually to confirm compliance with the PV GreenCard Programme, which also serves to reaffirm the installer's on-going commitment to implementing safe and quality Solar PV installations.

Step 4 – Benefits of Being a PVGC installation Company.

Apart from ensuring quality standards are maintained, registered companies have access to latest regulatory, technical and market information and will be promoted on the GreenCard website.

The PV GreenCard programme is a recognised quality assurance intervention among different stakeholders. As a registered installer, a company is profiled on an interactive geographical map. They can also link the map on their website and use the PV GreenCard registration as a competitive advantage to market their business and install their PV systems.

The benefits of registration are:

- Installers are vetted and recommended by the industry association.
- Installers are part of the SAPVIA endorsed installer database listed on the PV GreenCard website.
- Installers are typically eligible to tender for projects that prescribe the PV GreenCard as a requirement.
- Installers have access to the latest technological advancement in the industry and associated best practices via communication with the SAPVIA Secretariat
- Installers are associated with an industry promoted PV installation quality label.
- Add to the reputation of installers' Solar PV installation company.
- Installers have access to suppliers that prescribe the PV GreenCard as a requirement.
- Installers have access to an operative dispute resolution service facilitated by SAPVIA.
- Installers can collectively raise concerns regarding policy, regulations, and standards though SAPVIA as the industry voice.
- Installers enjoy the benefits of industry guidelines and installation checklists.
- Sponsorship opportunity – Installers' companies featured on the PV GreenCard website.
- Customers can find registered installers on an interactive map on the PV GreenCard website.

Step 5 – Issuing

Registered installers can issue a PV GreenCard per installation. The GreenCard enforces quality by ensuring that the correct procedures are followed, and that the relevant documentation are available. There is a minimal fee payable per GreenCard issued.

SEE ANNEXURE A: SAMPLE GREENCARD

Requirements to set up a PV GreenCard Training Centre

Application

Prospective Training Centre operators need to apply to become a registered PV GreenCard Training Centre. – (APPLICATION FORM CAN BE FOUND IN ANNEXURE C). The entity must be a member of the South African Photovoltaic Industry Association (SAPVIA) and maintain its membership in good standing to qualify for and retain registration as a PV GreenCard Training Centre. Each prospective Training centre must be applied for separately. The application process is for a single defined Training centre. The application should include pictures of the facilities and equipment and CVs of the human resources. To set up a SAPVIA PV GreenCard Training Centre, the following minimum requirements need to be adhered to:

1. Human Resources

The training must be conducted by a Solar PV Subject Matter Expert. The trainer must have the following:

- Excellent verbal and written communication skills, with an ability to explain technical concepts to non-technical stakeholders.
- Competency and skills to deliver the training (Competency to be proved by attendance of train the trainer course or similar training competency)
- Technical skills - preferably a qualified electrician or electrical engineer
- Working experience in designing and installing of PV systems.
- 2 years technical experience in the PV Industry or the installation of minimum 20 PV systems.
- Attend a 5-Day SAPVIA Solar PV Installer Course
- Pass the PV GreenCard Assessment Theory and Practical paper at an accredited facility.

2. Learning/Training Materials

- Reference material as set out in this document – E.g., SANS10142 and OEM Specifications of all used equipment.
- Compliance with all relevant health and safety requirements and may include a medical bag or access to medical treatment, fire extinguishers, and related equipment.
- To be supplied by SAPVIA;
    - PV GreenCard Guidelines
    - Training material slide deck
    - Videos for trainers on how to offer the training material, to be provided by SAPVIA
    - SALGA/AMEU SSEG Resource pack (Application form, requirements document, commissioning form etc.)
    - Reference material that may be distributed (OHSA, EIR and NRS documents)

3. Facilities (minimum requirements)

The applicant must have access to a suitable facility to conduct the training which includes the following;

- Classroom facilities with a capacity to seat the maximum number of candidates that can be trained at one time. Recommended space for 15-20 trainees
- Demonstration Solar PV installation for showcase/teaching purposes made up of a training roof and a training inverter station. Specifications listed in the following section.
- Store facilities to store Training tools, materials, and equipment.
- Toilet facilities, resting space, etc.

The facility should include the specified equipment, be safe, secure and accessible to candidates, and meet the relevant standards for occupational health and safety.

Setting up the Training Centre

Equipment List and Setup Instructions

Material for PV Courses

To successfully deliver this training course, particularly in view of the skills acquisition, certain materials and equipment are required. A careful review of this section is warmly recommended well ahead of the delivery of the course to ascertain availability, verify operating status, initiate procurement or repairs and provide alternatives wherever the originally recommended item is unavailable. The success of this training course vitally depends on practice on such material and equipment listed below.

Theory

It is expected that any training provider wanting to offer the course will have a training classroom with desks and chairs, a projector, a flipchart and markers to conduct the theory portion of the training.

Practical

This is the list of material required for the practical portion of the SAPVIA Solar PV Installer Training.

#	Material	Photo	Description
1	Training Roof		Ground standing roof with usual structure (rafter, tiles...). Sufficient roof-area to mount the system (4 modules). Tilted angle 10° to 30° recommended

2	Mounting System		Complete system, including all necessary components (hooks, rails, clamps...) and documentation
3	4 PV Modules		Standard modules 60 or 72 cells
4	PV-cable		Recommendation: 6mm PV1-F approved or similar, red and black.
5	PV connectors		Same manufacturer as in use at the modules, recommendation: MC4
6	MC4 Crimping tool		Provided by the original plug manufacturer or a third-party manufacturer if suitable
7	DC Clamp, 1000V AC/DC, CAT III		Current should always be measured only with a clamp to avoid arcing in case of short circuit. Don't use usual multi-meter for measuring DC current!

8	Electrician tools		All usual tools an electrician needs for his work (screwdriver, side cutter...)
9	Measuring tape		For training an ordinary ruler is reasonable, on site a 5m tape or a distance meter is recommended
10	Cutting tool: saw or angle grinder	 	Saw is more accurate; angle grinder is most common
11	Milling machine or grinder		Milling machine is more accurate, angle grinder is most common
12	Drilling machine		If reasonable
13	Wooden layer (shims)		to adapt height of hook, durable material

14	Cable ties		UV resistant recommended. If reasonable also with clamp to attach to the frame
15	Flexible duct hose (convoluted tubing, “sprague”)		UV resistant - as additional UV protection for cables directly exposed to the sun
16	Ventilation tiles (if available)		Inlet for DC cables to building
17	PPE - Safety shoes, appropriate clothes		Shoes with metal cap, reinforced sole Durable work clothing
18	PPE - Safety gloves, protective glasses		As mentioned in the safety regulations for all tools in use
19	PPE - Hard hat / Bump caps		For training bump caps are recommended, on site hard hats may be compulsory

Inverter installation

An example of an Inverter installation is required to discuss the components, installation procedure and the necessary regulatory requirements for the Solar PV installation.

The training inverter station is intended to showcase all the equipment required for a compliant and safe PV installation and should include all equipment apart from the PV modules and other components of the installation typically found on the roof. In the one-week course the mounting of the complete installation including the AC side is not possible due to time constraints.

The specific material required for the training inverter station will be equipment dependant, but a training inverter installation must be installed with the following required components:

- PV Disconnect device (DC Isolator or DC breaker).
- DC Fuses (Positive and Negative)
- Type II DC Surge protection
- Single Phase Grid-tied inverter (according to the NRS-097-2-1:2017).
- 2-Pole AC Disconnect device close to the inverter.
- Optional 2-Pole Lockable Disconnect device (NRS 097-2-1:2017). This is generally required for systems larger than 30kVA but utility dependant.
- Pre-wired DB Board with the following minimum devices:
    - 2 Pole main breaker/Isolator. (This device will be fed from the mains via a plug and extension lead or hard-wired permanently. If the intention is to showcase a system as live)
    - Earth leakage unit.
    - Earth Leakage protected Circuit breaker wired via a switch to a light (to indicate AC present).
    - Optional: Plug point and circuit breaker Earth Leakage protected.
    - 2-pole circuit breaker wired from the PV circuit.
    - Surge Protection.
    - Earth Bar.
    - Neutral Bar for Earth Leakage protected circuits.

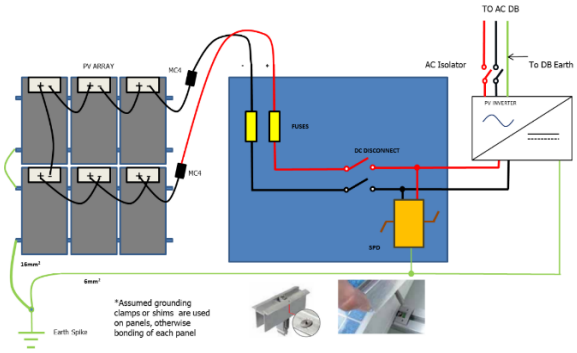

FIGURE 1: DC INSTALLATION REQUIREMENTS

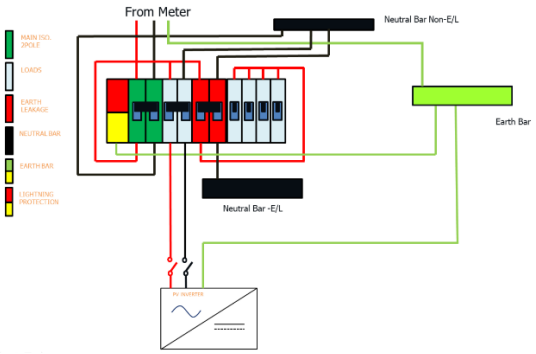

FIGURE 2: AC INSTALLATION REQUIREMENTS



FIGURE 3: EXAMPLE TRAINING INVERTER INSTALLATION

DC Wiring (DC Combiner) Specifications

Equipment[1]	Specification	Quantity
DC Disconnect Device	DC Isolator rated for the string current/voltage with suitable enclosure	1
Fuse holder and Fuses	Rated for the string current/voltage with suitable enclosure	2
Surge arrestor	DC Type II with suitable enclosure	1
DC warning Signage	SABS 1186-1, NRS 097-2-1 or Municipal SSEG requirements	

AC Wiring Specifications

Equipment	Specification	Quantity
Inverter	Grid-tied inverter suitable for the string voltage and current. Start-up voltage should be low enough to start up from 6 modules in series, even when it is very hot. The inverter needs to be NRS097-2-1 certified.	1
AC Isolator	2 Pole, to be mounted close to the inverter. With suitable enclosure.	1
Surge arrestor[1]	AC Type II	1
Optional Lockable Disconnect device	2-Pole Lockable Disconnect device (NRS 097-2-1:2017 paragraph: 2.2.2.13). This is generally required for systems larger than 30kVA but utility dependant.	1

[1] Can be combined into 1 unit

Equipment	Specification	Quantity
DB Board	DB Board with enough space for: 2-pole main isolator Earth Leakage unit Circuit Breaker for light Circuit Breaker for plug 2 Pole PV Breaker	1
SSEG Warning Signage	SABS 1186-1, NRS 097-2-1 or Municipal SSEG requirements.	

Additional Requirements



All material and tools for the mounting systems should be discussed with the system manufacturer. A problem using the same material for several courses: components of the system may be damaged after a while (this is a problem especially with roof tiles, rafters, some flat top roof systems or roof integrated systems). Especially the rafters are damaged after a while due to the screws. Also screwing into profiled sheeting will damage the sheeting within short time. Either it is necessary to renew the damaged components frequently or to find another solution. The following reference material is required. SAPVIA to provide reference material where possible.

Reference Material (Most recent versions of reference material specified required)	• Occupational Helath and Safety Act (OHSA) • Electrical Installation Regulations (EIR) • SANS 10142-1 (wiring of premise part 1 low voltage installations) • SANS 60364-7-712:2018 Requirements for special installations or locations - Solar photovoltaic (PV) power supply systems • NRS 097-2-1: Grid interconnection of embedded generation, part 2: small-scale embedded generation, section 1: utility interface • OEM Specifications and installation manuals

Optional Requirements

The following material is recommended for additional training topics.

A digital camera and an angle meter are used for on-site survey. A smart phone with corresponding apps is suitable. Example free PV-Sol app.

Second DC clamp: String currents are below 10A, DC main line currents for MW installations can be > 100A. A clamp that can measure high current has a higher uncertainty for low current. Therefore, two different clamps may be better. DC Voltage measurement must be at least 1000V.

Infrared camera, Isolation meter and/or EN 62446-meter, Earth resistant meter. If measurement according EN 62446 is recommended an isolation meter or EN 62446 meter is compulsory.

FIGURE 4: PV-SOL APP

Mounting

Space for flat top roof mounting, mounting system for flat top roofs. Material for matting to preserve the roofing should be available e.g. with additional aluminium layer to prevent plasticizer to dissolve from the matting material.

Consider also requirements in the mounting system manual.

Safety measures

Compliance with all relevant health and safety requirements as stipulated in the OHS act and may include a medical bag or access to medical treatment, fire extinguishers, and related equipment.

FIGURE 5: FLAT ROOF PV MOUNTING SYSTEM EXAMPLE.

For the practical part on a small training roof standing on the ground no scaffold or fall arrest system should be necessary in most cases. Nevertheless, it must be ensured that all required precautions are performed.

Accreditation by SAPVIA

Once an application is received, the SAPVIA Secretariat will review and determine if the Training Centre has met all of the requirements as listed in this document and could be accredited based on the documents submitted, this will be followed by a site visit. This is to ensure that quality standards are maintained across Training Centres. The Training Centre will then be approved or declined with recommendations to resubmit.

SAPVIA will provide a checklist for this accreditation based on the presented guideline. The aspirants have to provide documentation of the established Training Centre and proof that they comply with the human resource requirements.

Summary of the Procedure



The following procedure should be followed:

- Identify suitable site/facility
- Secure a storage area, demonstration station, and classroom area.
- Design the training roof based on the requirements and procure the required materials and consumables.
- Build the training roof(s).
- Procure the tools based on the tool list provided
- Procure Safety and Test equipment.
- Document the material, tools, and consumables to control the issuing and return of it
- Inform SAPVIA of the completion of the training centre and arrange for an inspection to approve the centre.

PV GreenCard Training Syllabus

1. Overview

Course objective

Enable technicians with formal educational background as well as informal PV training and installation experience to perform, supervise and lead the installation, maintenance and troubleshooting of solar photovoltaic systems – in conformity with the legal requirements in South Africa.

Target group

Planer and installer of PV systems, e.g. electricians, but also other persons until they have basic understanding of an electric system and the mechanical work required.

Recommended entry criteria

Minimum age 18 years, preferably qualified as electrician or with suitable Solar PV installation experience.

Duration

40 hours recommended (equivalent to 5 days at 8 hours per day)

Classroom size

15-20 trainees recommended

Expected tasks and duties

- Size PV systems (Grid Connected and Hybrid)
- Lead installation activities
- Install PV systems
- Commissioning of a Solar PV system
- Issuing of a PV GreenCard As-Built report
- Perform maintenance and troubleshooting tasks
- Maintain records required for monitoring PV systems
- Comply with Occupational Health and Safety Act regulations
- Manage and maintain relationships with customers

Teaching methods

- Highly practical orientation (“hands-on”)
- Lectures and presentations
- Practical work
- Simulations
- Field trips (if possible)
- Demonstration
- Discussion

Training methods (not part of the 40-hour syllabus)

- Theoretical examination
- Practical examination
- See PV GreenCard Training for more information

2. Using the Syllabus

The content of each course module is broken down to topical levels. Key information guides the trainer on the following:

- Appropriate teaching techniques and methods selected for effective delivery of contents.
- Activities to aid effective knowledge transfer.
- Materials and equipment required for training activities.

3. Course Duration

The recommended duration of this course is 40 hours. This would translate into 5 days of training for a fulltime delivery of 8 hours per day.

The course is designed in modules, each with a recommended duration of 1 day. The recommended amount of time to be spent by the participants in specific learning environments is suggested in the following groups:

- Classroom: Duration suggested in a classroom setting where techniques such as discussions, role plays, and interactive sessions, exercises and presentations are deployed to engage the students, beside traditional teaching.
- Lab/Workshop, Field trips: Duration suggested for engaging in practical aspects. This could be field trips, site visits or any other form of engagement practical in nature.
- Spare time: Contingency kept aside to use at discretion of the trainer. The trainer decides what environment to use the spare time for based on the response of the class to course content.
- Additional self-study: Duration the student is expected to engage in self-study and research complementing classroom and practical time.

4. Activities

Several activities shall be implemented into the course. These include:

- **Demo:** Concepts or aspects are being demonstrated to students.
- **Exercise:** Activities that require the student to solve problems in the classroom.
- **Workshop:** The student engages in practical exercises meant to imitate real world conditions.
- **Interactive session:** Sessions where students are engaged in open discussions to share their views with the class
- **Site visit:** Field trips that serve as a means of buttressing the point made in class by providing the students with tangible evidence/experience of concepts taught.

5. Hints/Suggestions

- Information given via flip charts can be reviewed at a later time. On a white board they are gone once they are wiped out. Don't stand in front of the flip chart or white board while writing otherwise the participants cannot follow your explanations.
- All information must be readable. Consider font size in your presentation. If you use photos or screen shots where the information is too small enlarge important topics.
- If no laser-pointer is available the mouse-pointer can be used instead.
- Turn off the screensaver of your laptop.
- Calculation examples should be at hand to avoid unclear examples or numbers that could be misunderstood. Ensure that all parameters in a mathematical formula are clearly understandable. Don't use the same value for different parameter (e.g. 45° for both NOCT and ambient temperature) otherwise the participants are easily confused. Also check the results or intermediate results and ensure that these don't have the same value of a given parameter.
- For system sizing the use of actual data sheets is recommended. Sheets should be available as hand-out or displayed on the screen so the participants have to look for the correct parameter themselves.
- If you use commercial videos e.g., for mounting systems ensure that they show a state-of-the-art installation or use wrong behaviour as missing safety measures for discussion. Avoid too specific and long videos as in the end they are not helpful and will annoy the participants.
- Ensure that the material for the practical training is complete at hand on the scheduled day. This includes all necessary components, additional spare parts, manuals and mounting instructions, safety measures. Also check metering equipment to avoid discharged batteries or broken cables.
- Use appropriate analogies to explain technical issues. Voltage and potential can be described as water columns and current as water flow. If you blow over a piece of paper you can show suction on a module due to wind loads.
- In addition to a pause at lunch for 45min or 1hour ensure short breaks of 10min or 15min every 2h or even more often to keep the participants observant. Name a certain time for restart so everyone will be back in time.
- Ensure an adequate catering. A minimum requirement is drinks like water. Lunch is recommended.
- Ensure a quiet environment as far as you can influence it (e.g. leaf blowers shouldn't be allowed to operate outside during the course).

6. Meaningful Display Models

Display models of PV components can help the participants to understand certain topics. The following list is not meant to be exhaustive

Component	**Topics**
PV Module	Show internal interconnection of cells, the connection to the bypass diode, the junction box, cable, plugs, how the frame can protect the back sheet…

DC fuse	Show difference to an AC fuse (dimensions, labelling)
Components of a mounting system as short rails, hooks, clamps	Discuss state of the art craftsmanship.
Cable ties, also special implementations, trunks and tubes	Discuss the necessity of proper cable laying, how to avoid laying over sharp edges, exposure to UV, tight bending radius, mechanical stress…
PV cables	Show composition of cable (protection class II), show problems if bending radius is too tight

Some of the display models are in use during practical installation. Even then some additional components for the presentation are recommended as these can be used to physically show problems and solutions.

7. PowerPoint Presentations

The content in the power point presentations provided by SAPVIA are the minimal requirements for a training course leading to the PV GreenCard two-day Training.

The presentations are subdivided into the following five presentations

- 01_Basics_Electricity_2017_II.pptx
- 02_Introduction_Irradiation_Cells_Modules__2017_II.pptx
- 03_Inverter_2017_II.pptx
- 04_Mounting_2017_II.pptx
- 05_Commisioning Operating Measurements_2017_II.pptx

The expectation is that candidates should be familiar with the content of 01_Basics_Electricity_2017_II.pptx before starting the course. It is recommended to send a PDF of this presentation to everyone in advance. A detailed discussion might be necessary if the participants are not comfortable with these topics.

The other presentations are subdivided based on the respective content. Each one covers roughly one day of the five-day course. In addition to the presentations the training course shall contain some practical exercises such as mounting and commissioning and examples for calculations and sizing of a PV System. Ensure that in total the course can be performed within the scheduled time of five days.

The trainer may change the existing slides provided the content/concept remains the same. If the existing slides are updated or changed, we strongly recommend informing SAPVIA to ensure a correct content for both the presentations used by the trainer and the presentations provided by SAPVIA to other training facilities.

The presentations contain hidden slides with additional information. The trainer can decide whether to use these slides or not.

Annexure A: Sample GreenCard

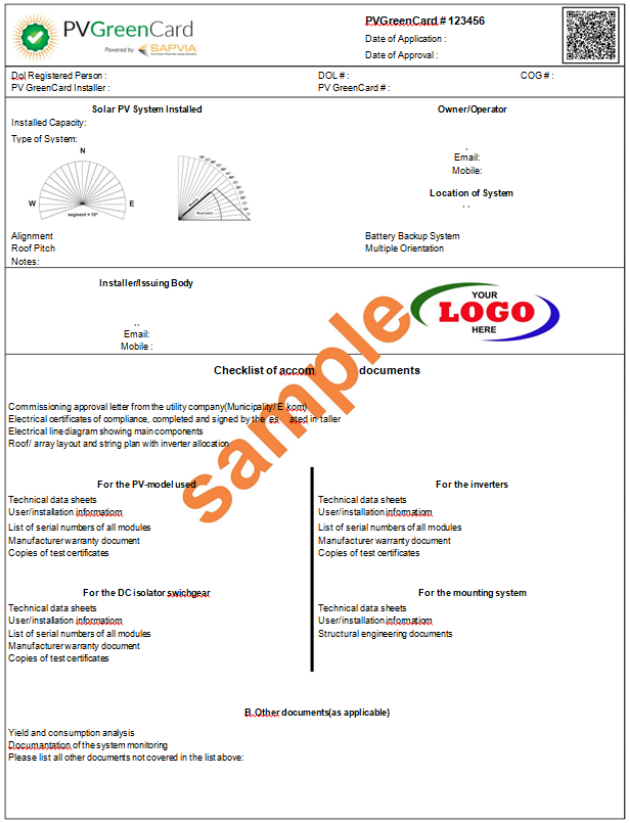

PVGreenCard

Powered by SAPVIA

PVGreenCard # 123456

Date of Application :

Date of Approval :

DoI Registered Person :

PV GreenCard Installer :

DOL # :

PV GreenCard # :

COG # :

Solar PV System Installed

Installed Capacity:

Type of System:

N W E

Alignment

Roof Pitch

Notes:

Owner/Operator

Email:

Mobile:

Location of System

Battery Backup System

Multiple Orientation

Installer/Issuing Body

Email:

Mobile :

YOUR LOGO HERE

Checklist of accom documents

Commissioning approval letter from the utility company(Municipality/ E kom)

Electrical certificates of compliance, completed and signed by the es ated in taller

Electrical line diagram showing main components

Roof/ array layout and string plan with inverter allocation

For the PV-model used

Technical data sheets

User/installation information

List of serial numbers of all modules

Manufacturer warranty document

Copies of test certificates

For the inverters

Technical data sheets

User/installation information

List of serial numbers of all modules

Manufacturer warranty document

Copies of test certificates

For the DC isolator swichgear

Technical data sheets

User/installation information

List of serial numbers of all modules

Manufacturer warranty document

Copies of test certificates

For the mounting system

Technical data sheets

User/installation information

Structural engineering documents

B.Other documents(as applicable)

Yield and consumption analysis

Documantation of the system monitoring

Please list all other documents not covered in the list above:

sample



PVGreenCard

Powered by SAPVIA

PVGreenCard # 123456

Date of Application :

Date of Approval :

System Components

Modules

Manufacturer 1

Module Type

Installed Capacity

IEC Certified

Manufacturer 2

Module Type

Installed Capacity

IEC Certified

Notes:

Inverters

Manufacturer 1

Inverter Type

Grid Opperator Approved

NRS 097-2-1 Certified

Manufacturer 2

Inverter Type

Grid Opperator Approved

NRS 097-2-1 Certified

Notes:

Cables and Power Lines

	PV String Cable	PV Main Cable (DC)	Power Line (AC)
Manufacturer:			
Type:			
Cross Section:			
Current Carrying Capacity:			

Mounting System

Manufacturer

Type

Location

Design

Fastening system

Roof Hooks

Type

oof Hooks Installation

Building Requirements Met

Minimised Corrosion Risk

NO IMAGE AVAILABLE

sample

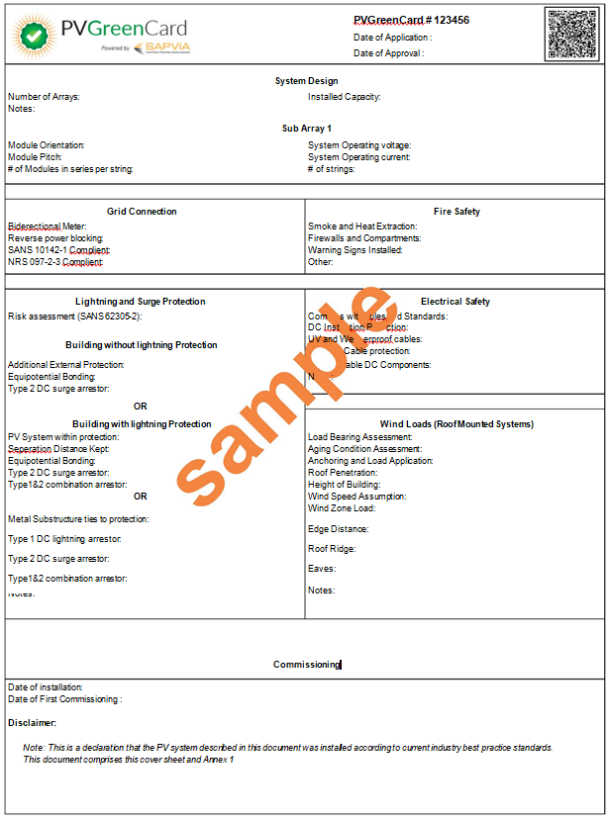

PVGreenCard

Powered by SAPVIA

PVGreenCard # 123456

Date of Application :

Date of Approval :

System Design

Number of Arrays:

Notes:

Installed Capacity:

Sub Array 1

Module Orientation:

Module Pitch:

# of Modules in series per string:

System Operating voltage:

System Operating current:

# of strings:

Grid Connection

Bidirectional Meter:

Reverse power blocking:

SANS 10142-1 Complient:

NRS 097-2-3 Complient:

Fire Safety

Smoke and Heat Extraction:

Firewalls and Compartments:

Warning Signs Installed:

Other:

Lightning and Surge Protection

Risk assessment (SANS 62305-2):

Building without lightning Protection

Additional External Protection:

Equipotential Bonding:

Type 2 DC surge arrestor:

OR

Building with lightning Protection

PV System within protection:

Seperation Distance Kept:

Equipotential Bonding:

Type 2 DC surge arrestor:

Type1&2 combination arrestor:

OR

Metal Substructure ties to protection:

Type 1 DC lightning arrestor:

Type 2 DC surge arrestor:

Type1&2 combination arrestor:

Notes:

Electrical Safety

Com e with cles d Standards:

DC Insta tion P ction:

UV and We erproof cables:

Cable protection:

able DC Components:

N

Wind Loads (RoofMounted Systems)

Load Bearing Assessment:

Aging Condition Assesment:

Anchoring and Load Application:

Roof Penetration:

Height of Building:

Wind Speed Assumption:

Wind Zone Load:

Edge Distance:

Roof Ridge:

Eaves:

Notes:

Commissioning

Date of installation:

Date of First Commissioning :

Disclaimer:

Note: This is a declaration that the PV system described in this document was installed according to current industry best practice standards.
This document comprises this cover sheet and Annex 1

sample

Annexure B: Training Course Overview

Module 1. Basic electricity

- Overview
- Basics
- Electrical laws and rules
- Understanding characteristic curves
- Electrical safety

Module 1 is sent to the participants in advance. It is not a direct part of the course. Due to the recommended minimum entry criteria the participants should have sufficient knowledge of the given material. Each one has to decide on his own if he still is in need of self-studies regarding the given topics.

Module 2. Introduction to solar photovoltaics

- Introduction
- Lecturer/Participants
- Photovoltaic history
- Motivation
- Types of systems
- Solar irradiation
- Solar energy
- Sun path, effects
- Measurement
- Solar cells
- Design and function
- Cell types and production
- Solar modules
- Production
- Electrical characteristics
- Quality / certificates
- By-pass diodes
- Shading
- Basics
- Site survey
- Types of shading
- Shading analysis

Module 3. Planning of a grid tied PV System

- Design of PV systems
- Inverter
- Basic Design / internal layout
- Electrical characteristics
- Additional characteristics
- System concepts
- Overview
- Dimensioning
- Dimensioning tools
- Simulation
- Planning process
- Safety

Module 4: Mounting an operating a PV System

- Mounting Systems
- Roof mounted PV systems
- Structural Analysis
- Safety

- Sample PV Roof Top
- Practical Part
- Site survey
- Mounting a PV systems
- Cable laying
- Safety

Module 5: Commissioning / maintenance

- Commissioning / maintenance
- Commissioning
- Operation-Maintenance
- Typical errors
- Commissioning / maintenance
- Commissioning (V_{oc} measurements)
- Operation-Maintenance
- Typically, at the end of the modules the learner is able to:
- Explain the basics of electricity related to photovoltaics
- Appreciate various applications of solar photovoltaics
- Describe the different configurations for module Interconnection

Annexure C: Application Form

Training Centre Application Form

Note: Please complete with the most relevant up to date information. Training providers who submit this application form could be contacted for further information and/or a site visit if need be. *You are required to sign and return the Terms and Conditions with this application.

Training Institution Information				
Full Name				
Address				
Number of Trainers				
Type of Institution		**Government**		**Private**
Available Facilities		**Yes**		**No**
Solar PV Equipment		**Yes**		**No**
* **Note:** Please include pictures of your facilities and the equipment				
Trainer Information				
Full Name				
ID Number				
Qualifications				
Training Experience				
Solar PV Experience				
* **Note:** Please include the full CV of Trainer. If you have more than one trainer please show this on a separate Application Form				

Annexure D: Terms and Conditions

The South African Photovoltaic Industry Association (SAPVIA) grants the status of Accredited Training Centre to qualifying parties. Each Training Centre and its designated representatives hereby acknowledge and agree to comply with the Terms and Conditions contained herein for the period the Training Centre hold its designation.

1. TRAINING CENTRE BUSINESS PRACTICES:

1.1 Training Offering

For the term of the accreditation issued by SAPVIA, the Training Centre agrees to offer PV GreenCard Training substantially consistent with the Application Information approved by SAPVIA and agrees to notify SAPVIA of any deviations from the Training offered, including format change, Delivery Plan and/or methods 10 days prior to such changes.

1.2 Training Centre licensing fees payable to SAPVIA

For the term of the accreditation issued by SAPVIA, the Training Centre operating entity agrees to pay an annual licensing fee per accredited training centre in operation. The Training Centre licensing fee will be communicated annually to all Training Centre operating entities.

1.3 Trainer Qualifications

Trainer's qualifications and skills have to comply and adhere to the requirements as provided in the Training Centre Guidelines.

1.4 PV GreenCard Training Certification

The Training Centre agrees to offer and administer the PV GreenCard Training in a manner consistent with the procedures described in the Training Centre Guideline and in accordance with the Accredited Entity Training Programme, in addition to other applicable Training administration documentation provided to the Training Centre. SAPVIA will provide Training Centres with the final most up to date versions of the required documents. To ensure an open and transparent market, SAPVIA will not prescribe a pricing to the Training and will leave this up to the individual Training provider.

The facility needs to be suitably staffed and equipped to offer the PV GreenCard Installer Training. SAPVIA could at any time conduct a site visit to ensure the standard of Training is being maintained. Training Providers need to supply SAPVIA with their Training institution logo, relevant person's contact details and a 100 word write up for the PV GreenCard website. Should you have available dates for upcoming Training, this will also be included on the website as acquired. To ensure we keep track of the Training, it is requested that within 10 days of the successful completion of the Training session; you provide SAPVIA with a list of all participants undertaking the Solar PV installer course with contact details

The Training Centre acknowledges the content of the PV GreenCard Training are proprietary information owned by SAPVIA and shall therefore not be copied or reproduced or utilized in any manner not described within the Guideline or in any associated documentation referenced herein.

Training Centres are expected to submit a Training Register of the Training attendees to SAPVIA on a monthly basis.

2. TRAINING CENTRE TERMS AND CONDITIONS:

2.1 Prospective Training centre operators need to apply to become a registered PV GreenCard Training centre. The application should include pictures of the facilities, equipment, and CVs

of the human resources, as well as any other documentation SAPVIA may request to reconfirm verification of the Training Centre criteria.

2.2 The Training Centre applicant understands and agrees that SAPVIA will conduct a due diligence process to verify the information provided in the Training Centre application. Third parties may be contacted to confirm the information provided in the application. The Training Centre applicant waives any claims against SAPVIA for breach of privacy or confidentiality during this verification process that could arise from the good faith verification activities and/or any other investigation that SAPVIA conducts as SAPVIA determines in its sole and absolute discretion.

2.3 In the event of any changes pertaining to Training Centre, including but not limited to change in ownership, contact information or any other substantive changes to the information provided within the Application Information by the Training Centre, the Training Centre shall provide SAPVIA electronic mail notice of such changes within thirty (10) days of such changes.

2.4 The Training Centre agrees that SAPVIA, in its sole discretion, may publicly list the Training Centre on the SAPVIA website and social media. Listing may include a link to the Training Centre website, along with other non-confidential information associated with the Training Centre.

2.5 The Training centre acknowledges that it will abide by and uphold the terms and conditions of the SAPVIA Agreements listed herein and the standards of the SAPVIA Code of Conduct.

2.6 The Training Centre applicant affirms that all information provided in the application for Training Centre Accreditation is correct and complete.

3. GENERAL TERMS AND CONDITIONS:

3.1 Disclaimer of Warranties

SAPVIA provides any and all services and information "as is" basis and grants no warranties of any kind, express, implied or statutory. SAPVIA specifically disclaims any implied warranties of merchantability, fitness for a particular purpose, or non-infringement.

3.2 Indemnity

The Training Centre agrees to defend, indemnify, and hold SAPVIA, or its employees and affiliates harmless against any losses, expenses, costs or damages arising from, incurred as a result of, or in any manner related to any claim or action resulting from gross negligence by the Training Centre.

3.3 Non-Disparagement

You agree that you will not publish on the Internet, directly or indirectly, any statement about SAPVIA or the PVGC Programme, SAPVIA and PV GreenCard Programme or any agent thereof that is defamatory.

3.4 Governing Law

This Agreement shall be governed in accordance with the laws of the Republic of South Africa, notwithstanding any conflict-of-law provisions to the contrary.

3.5 Class Action Waiver

You hereby agree to waive any class action proceeding or counterclaim against SAPVIA, its affiliates, successors, or assigns, whether at law or equity, regardless of which party brings

suit. This waiver shall apply to any matter whatsoever between the parties hereto which arises out of or is related in any way to this Agreement or the Services, the performance of either party.

3.6 SAPVIA's Remedies

In the event of a breach or threatened breach by you of any of the provisions of this Agreement pertaining to intellectual property, disparagement, or unauthorized use of the Training, you hereby consent and agree that SAPVIA shall be entitled to obtain, as a matter of right hereby granted, a temporary or permanent injunction or other equitable relief against such breach or threatened breach, without the necessity of showing any actual damages or that monetary damages would not afford an adequate remedy.

3.7 Assignability

This Agreement is personal to you, and you may not assign this Agreement or the rights and obligations hereunder to any third party.

3.8 Survival of Terms

Any provision of this Agreement which by its nature must survive the termination of this Agreement in order to give effect to its meaning shall survive such termination, including but not limited to the ownership, intellectual.

4. ACKNOWLEDGEMENTS:

4.1 I understand that SAPVIA PVGC Programme is not, nor is affiliated with, a governmental agency, and that the Solar PV Industry is not regulated by any authority.

4.2 SAPVIA's PV GreenCard Accreditation(s), Certification(s) and Bodies of Knowledge are voluntarily adopted by professionals in the Solar PV Industry.

4.3 I understand that when SAPVIA uses terms such as "Industry", "The Industry", "Industry Standard", "International Best Practice", "Generally Accepted" and other generalized terms, the terms are meant as a generalization of SAPVIA's characterization of what it believes to be the industry standard and/or majority view of what constitutes the industry standard.

4.4 I understand that SAPVIA endeavors to represent the voice of the industry's majority, and that because it is not practical to survey and interview every organization and professional involved in Solar PV Industry, SAPVIA has used reasonable methods and efforts to define and establish Solar PV Installation standards for the purpose of supplying the industry with standards that are viable and practical minimum competency standards.

4.5 I understand that my engagement with SAPVIA, as described herein, constitutes my agreement with alignment towards and support of, the PV GreenCard Programme standards, and I will use my best efforts, judgment and actions to uphold and defend these standards.

4.6 I understand and agree that SAPVIA maintains the right to modify all Terms and Conditions herein as it deems necessary from time to time without notice, and that it is my responsibility to review all Terms and Conditions on a regular basis.

4.7 I understand and agree that the following are incorporated into and made a part of this Agreement:

5. PV GREENCARD TRAINING CENTRE CODE OF CONDUCT

5.1 SAPVIA is a voluntary, member organization that is dedicated to promoting Solar PV and suitable levels of Skills Development requirements and Installation Best Practice, therefore demanding the highest professional and personal conduct by its Training Centre Partner.

5.2 All Training Centres of PV GreenCard Programme are expected to demonstrate such conduct in all dealings with employers, customers, clients, colleagues, and the public. Personal interest or advantage must at all times be secondary to those of others.

5.3 SAPVIA recognizes that professional accreditation and certification creates an expectation in the community that the Training Centre Partner will discharge professional responsibilities with integrity, objectivity, due care, and genuine interest. At all times these professional responsibilities must respect the confidentiality as agreed by the parties involved in the delivery of such services.

5.4 Reports that Training Centre Partners are suspected of breaching this Code of Conduct will be reviewed and investigated. The Training Centre Partner in question will be contacted and will be given the opportunity to fully respond to the potential breach. Proposed action may include censure, suspension or termination of the Partnership. Any proposed action will be subject to the SAPVIA/ PV GreenCard Appeals procedure.

5.5 Reports of Breaches of Code of Conduct

Any Report of conduct that could reasonably construed as violating the SAPVIA/ PV GreenCard Programme Code of Conduct will be assigned to SAPVIA for investigation. Immediately upon referral, a letter of notice will be sent to the alleged violator with a summary of the reported violations. SAPVIA will maintain full confidentiality regarding the allegations during the investigation period. During such investigation SAPVIA will strive to protect the identities of the parties involved to the extent reasonably possible within the investigation process.

5.6 Investigation of Reports of Breach

The investigation process will be thorough and impartial. It will be the objective of SAPVIA to complete the investigation with a period of sixty days. This timeline may not be possible if the alleged violator refuses to cooperate in the investigation. The findings of the investigation shall be in writing.

5.7 Levels of Severity for Breach

The severity of the level of breach of the Code of Conduct shall determine the proposed restrictions to be imposed on the violator. Each situation will be evaluated separately. Restrictions can range from a letter of warning, criticism, suspension or termination.

5.8 Proposed Restrictions and Penalties for Breach

Warning – In the event the breach is determined to be minor and potentially unintentional, written warning will be issued to the Training Centre. Evidence of corrective measures will be adequate to avoid any further actions. It will not be made public.

Condemnation – A breach of a serious nature that is suspected of being done intentionally; a letter of condemnation will be issued. The censured Training Centre will be given the

opportunity to correct the conduct – failure to promptly address the issue will result in posting of such action on the SAPVIA website.

Suspension – A serious breach and failure to promptly correct the breach will result in a suspension of the SAPVIA designation for a period of up to 90 days. Corrective action will allow for a reinstatement of Training Centre designation.

Termination – Failure to correct a serious breach of the Code of Conduct after a period of suspension will result in a termination of the Training Centre designation.

6. LOGO USAGE POLICY

6.1 Associated with the Accreditation and Certification Designations are Logos. Upon an individual or entity's achievement of a Designation, the appropriate Logo may be used on stationary, promotional material and websites. Logos must be used in the exact configuration and colorization as shown in Schedule A – Logo.

6.2 Training Providers need to make a formal request for use of both the SAPVIA and PV GreenCard logos in advertising the Solar PV Installer Training course. SAPVIA reserves the right to deny any use of the Logos it determines to be inconsistent with the objectives of SAPVIA in its sole discretion.

SAPVIA
South African Photovoltaic Industry Association

PVGreenCard
Powered by SAPVIA
South African Photovoltaic Industry Association

PVGreenCard
Promoting safe quality Solar PV installations

7. Point of Contact

7.1 For any questions, queries and any other matter and support required, please contact info@sapvia.co.za